GTSystem

NEWSLETTER

English Version | 12/2021

ADVANCED TECHNOLOGY

Pre-commissioning of customer test benches in the pandemic

Greetings

Mr. Dieter Apold

Mr. Ralf von Dahlen

2016 – 2021: 5 years GTSystem GmbH

European and Asian business under pandemic conditions

GTSystem has been on the international market for more than 5 years. The time has passed incredibly quickly!

We are very pleased that our customers have consistently rewarded our technological lead and that we can already look back on more than 40 test bench applications in the market.

This number of installations was breathtaking and is mainly the effort of our experienced team in Germany, Austria, China and South Korea, who met the planned delivery dates for our customers even under the most difficult conditions in the pandemic.

The on-site inspections of the test benches in our headquarters in Germany together with the customers are a particular challenge due to the strict travel restrictions caused by COVID-19. In our Buy Off Test Center we are able to completely set up the customer test stands and carry out the pre-acceptance tests together with the customer and only then arrange for the shipment to the final installation site. The possible connected load of these buy-off test benches was again significantly increased last year, as we implemented an additional 2 MW grid connection with the construction of another transformer station. You will find a separate report of our Buy Off Center in this newsletter.

Right from the start, GTSystem chose an automation platform that allows our software specialists and the customer to parameterize test benches from all over the world, to commission them and also to run test cycles. This helps us particularly in the pandemic, but is also an important tool for service on test benches worldwide.

The range in operation and the flexibility in the equipment are our main topics in this newsletter. That is why we would like to recommend our portfolio expansion in the area of heavy-duty test benches and the report on actuator development for truck and tractor test benches.

In addition, we report on a highly interesting customer test bench that is used to determine the efficiency of very large bearings for wind energy gearboxes. We would like to express our thanks to the CWD (Center for Wind Power Drives) at the RWTH Aachen University for the approval and use of the images.

We are happy to answer all your questions about test bench technology personally, we look forward to hearing from you and wish you and our entire team all the best, stay healthy!

Dieter Apold
Managing Director GTSystem GmbH

Ralf von Dahlen
Managing Director GTSystem GmbH

ADVANCED TECHNOLOGY
PRE-COMMISSIONING OF CUSTOMER TEST BENCHES IN THE PANDEMIC

Author: Mr. Dennis Tetzlaff
Business- and Project Management Assistant

Despite the pandemic, we managed to deliver on time test benches which had been ordered from our Asian customers. This is possible thanks to our fully equipped commissioning and buy-off center in Germany. Every test bench is functionally tested at our headquarters in Aldenhoven to guarantee error-free operation for the customer. In addition to our standard acceptance protocol, the customer can define test cycles that can be validated with our own test items or with the customer's test items.

Our 2-megawatt transformer also makes it possible to fully operate test stands for heavy-duty applications (e.g. in the agricultural sector).

Due to the Covid travel restriction, customers could not travel to Germany for the buy-off, as is usually the case. With video conferences, measurement data and photos, the customer was still able to get a virtual picture of his test bench.

After shipping, the installation was carried out at the customer's final location by our Asian GTSystem colleagues. The preliminary acceptance carried out in Germany forms the basis for the final acceptance. The aim is to generate identical measurement data for both approvals.

CWD bearing test bench

Author: Mr. Rainer Gilles | Team Leader Electrical Engineering

The transformation to electric mobility is reflected in the test bench industry not only in electric motor test benches with high speed requirements above 18,000 min-1. In power generation plants, the demand for more efficient, more powerful and maintenance-free systems is also increasing. Renewable, environmentally friendly and inexpensive electricity is an increasing demand.

Worldwide unique research test bench for wind turbines by GTSystem

The Center for Wind Power Drives at RWTH Aachen University in Germany is testing full-size planetary bearings for wind power gearboxes on a unique research test bench supplied by GTSystem.

Premature bearing damage reduces the economic efficiency of wind turbines due to long downtimes and high repair costs. As part of the WT-LagerZentrum. NRW project, mechanical loads representing six years of wind turbine operation are simulated on the bearings in 1000 continuous test hours (~2 months). The research reduces the risk of bearing failure in the field and thus increases operational reliability as well as the amount of electricity produced.

The load units, consisting of two 650 kW electric machines and industrial gearboxes, simulate the load conditions of wind power drive gearboxes on the test bearings as realistically as possible. A particular challenge for the test stand design are high torques of 92,000 Nm that load the bearings during the test. This means that critical bearing loads caused by gusts of wind, run-ups and emergency stop processes can also be simulated.

For more Information about the Center for Wind Power Drives

https://www.cwd.rwth-aachen.de/go/id/mkfcx

Portfolio expansion of heavy-duty test benches

Author: Mrs. Jennifer Przybylski | Team Leader Mechanical Engineering

Another example of a heavy-duty test bench is briefly outlined below. A test stand is being set up for an Asian customer, which will enable the function and fatigue strength of transmissions to be tested in the torque range of up to 40,000 Nm.

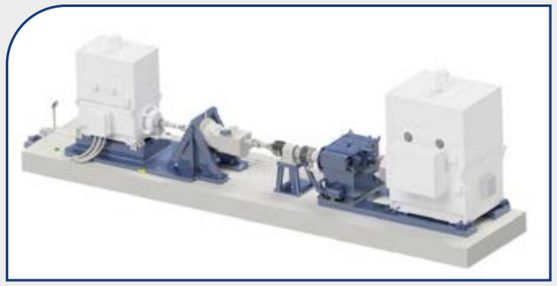

An asynchronous machine with an output of 730 kW, a maximum speed of 3,500 rpm, a torque of 4,000 Nm and a moment of inertia of 4.6 kgm² was selected as the drive machine. This electric machine can map the dynamic properties in the heavy-duty range very well.

To transmit torques of up to 40,000 Nm, a 2-stage industrial gear unit with an almost direct gear 0.93 - a 1: 1 ratio should be avoided because of the synchronicity and therefore the load on the same teeth - and a ratio of 2.86. A "smaller" asynchronous machine can then be used as the output machine.

The selected machine still weighs 6.5 tons and has a mass moment of inertia of 42 kgm². With an output of 820 kW, this machine can provide a maximum torque of 14,000 Nm.

Overload clutches are installed on the drive and output side, which trigger in a defined torque range and thus protect the test object from peak loads. For reasons of noise, both machines are equipped with air / water heat exchangers. Both machines also have an overload capacity of 20% for 60 seconds every 10 minutes.

Of course, this test stand must be designed to be torsion-resistant and FE-calculated. The drive machine can be moved electrically in the axial direction on the T-slot plate to simplify the adaptation to different test objects.

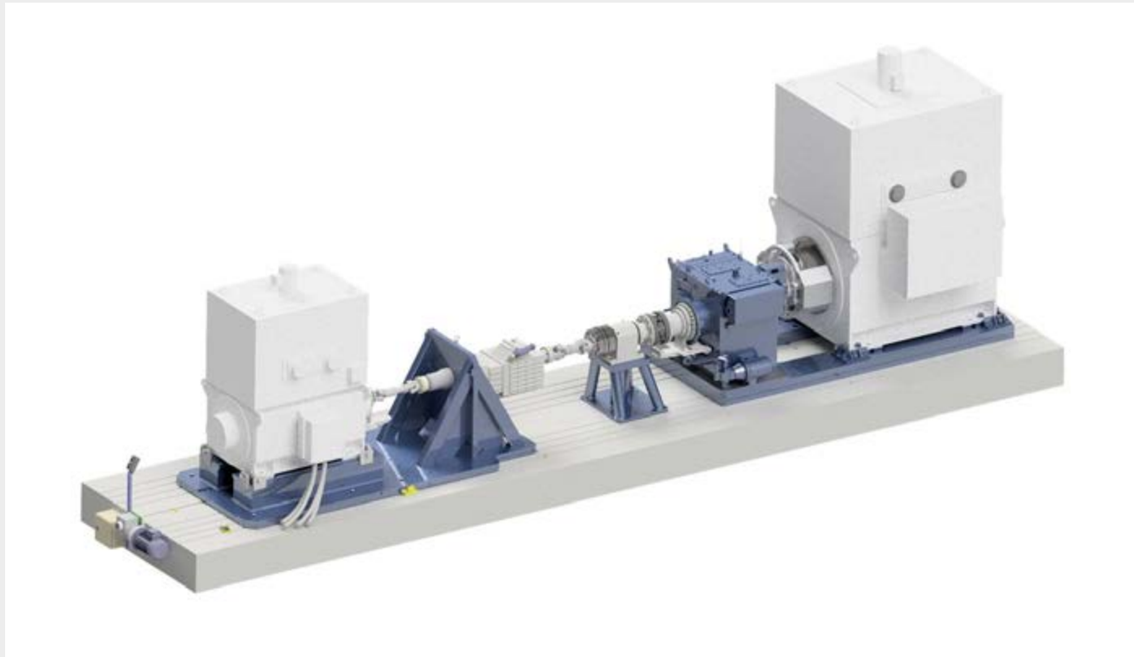

Development of a sub-system for a truck transmission test bench

Author: Mr. Thorsten Schneider | Team leader Product Development

In order to be able to shift a truck transmission within a test bench, an automated robot is required which, in addition to high impulse force and travel speed, also guarantees high positioning accuracy and reliability.

The boundary conditions for such a system originate from transmission development. The vehicle-specific shift cables or shift rods are usually not used in a truck test bench, so that the gears are engaged directly on the shift shaft. This direct access requires a very high positional accuracy of the robot. In addition, short switching times are required. The electric drives themselves result from the result of the acceleration and ultimately the possible speed of the robot. The force vectors are added as a further boundary condition.

Due to many years of experience with actuators and not least to combine all the boundary conditions, the choice of the actuator falls again on an electric lifting cylinder (actuator), or for truck transmission applications on two of them.

The illustration opposite shows a GTSystem actuator system for actuating an accelerator pedal. The necessary power supplies for the drive unit and all signal processing from and to the automation are centrally integrated in a stainless-steel housing directly on the actuator. The signals are digitally exchanged without interference. No additional decentralized power modules are required to operate the system. This significantly reduces the space required in the control cabinets of the test benches.

For the current truck transmission application, forces of up to 2000 N are required, the shift travel should cover + - 200 mm and the maximum travel speeds are more than 1000 mm / sec. The necessary positional accuracy of the selector shafts of <0.1 mm also requires an enormous rigidity from the robot's underframe. Various adjustment options are also required for an adaptive connection to different customer transmissions. An adjustment of the height, the angle and / or the alignment bring further requirements on the mechanical design of the frame into play.

The concept phase starts in the next step with all these boundary conditions. Here, the first design is already presented, and the FEM calculations are carried out to identify a tendency in the mechanics. A safety factor should always be included in the FEM analysis. This is to be selected depending on the load. In this case in particular, the calculation is carried out with a 30% overload.

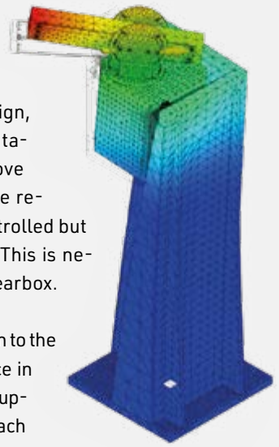

In parallel to the mechanical design, the control of two actuators is tackled. Both actuators should move in dependence on each other. The regulation is basically position-controlled but overlaid with a force regulation. This is necessary to avoid damage to the gearbox.

So that the gear positions are known to the controller later, an operating device in the form of an industrial tablet is supplied, with the help of which the „teach process" can then be carried out.

Like all products from GTSystem, this one also uses the current fieldbus standard EtherCAT.

Thus, all products can not only be used in the test stands offered by GTSystem with a high frequency interface but can also be supplied as an add-on system for existing customer test stands with other protocols.

GTSYSTEM PACKS UP!

The next test bench is safely packed by our team and is on its way to Asia

The dyno, inverter, gearbox and DUT are moved with a crane and safely wrapped in wooden crates. Due to the buy-off in our Headquarters the customer can start testing directly after Test bench set up.

GTSYSTEM GMBH EOL DEMONSTRATOR IN MOTION!

The DUT conveyer moves up to the load machine and is hydraulically fixed to provide fast and safe operation. A smooth connection between load dyno and DUT spline shaft is ensured by an implemented routine in our EOL software.

The automatic media connection follows the DUT requirements. Besides the shown DCT alternative test objects could be tested like DHT (Dedicated hybrid transmission) and e-motor.

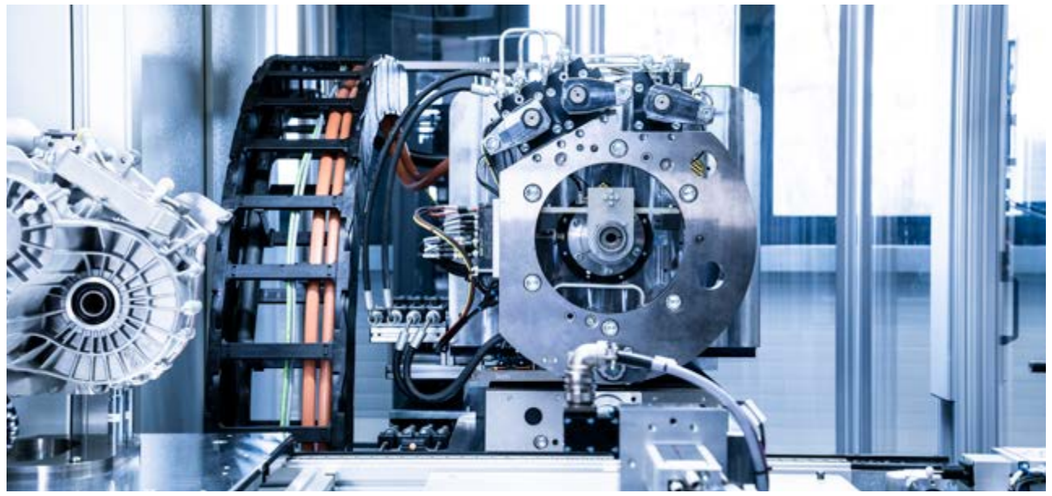

GTSYSTEM SUPPLIED ELECTRICAL TENSIONING TEST BENCH FOR CWD

GTSystem GmbH supplied an electrical tensioning test bench at the Center for Wind Power Drives of RWTH Aachen University for testing original size planetary bearings for WT-Gearboxes. The load units, consisting of two electric machines with 650 kW each and industrial gearboxes, simulate load conditions from wind power drive gearboxes on the test bearings as realistically as possible. Within the project WT-Bearing Center. NRW mechanical loads of 6 years WT operation is simulated at the bearings within 1000 continuous test hours. A special challenge for the test bench design are the high torques of 92,000 Nm, which stresses the bearings during the testing.

testing power wind energy bearing mechanical

HIGH-PERFORMANCE E-MOTOR INPUT FRAME TESTBENCH NEWLY DEVELOPED

GTSystem GmbHs newly developed high-performance e-motor input frame with high damping characteristics and height adjustment is also now patented in South Korea. It is a combination of polymer concrete and steel with high stiffness and high damping properties. This design allows input speeds up to 25.000rpm. The new design with a turning function covers testing setups of FF and FR powertrain configurations. It is also upgradable with noise-isolating covers for high-speed NVH applications.

automotive engineering mechanical

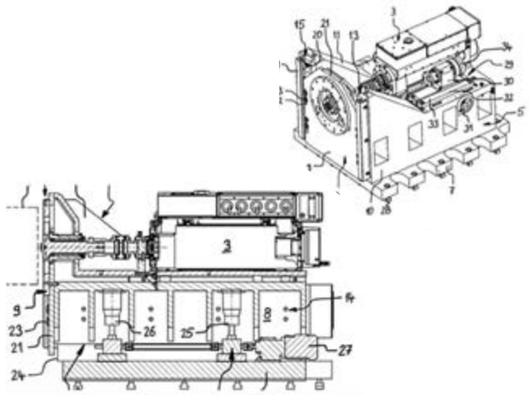

HOTSPOTS IN ASIA

1. In the first half of this year, global EV sales exceeded 2.5 million, accounting for 6.3% of the global automotive market. Compared with the annual sales of 3.1 million in 2020, the sales of EV have achieved explosive growth this year. In terms of the top ten sales models, Tesla Model 3 (244,000) topped the list, followed by Wuling Hongguang MINI EV (182,000 units), followed by Tesla Model Y (138,000 units). Among the top ten models, Chinese brand electric vehicles occupy four seats. In addition to Wuling Hongguang MINI EV, there are BYD Han EV, GWM ORA and GAC Aions. Source: CCTV

2. As of the end of June 2021, the number of new energy vehicles in China reached 6.03 million, accounting for 2.1% of the total number of vehicles. Among them, there are 4.93 million pure electric vehicles, accounting for 81.7% of the total number of new energy vehicles. In the first half of the year, 1.103 million new energy vehicles were newly registered, an increase of 774,000 vehicles or 234.9% compared with the same period last year; an increase of 473,000 vehicles or 74.9% compared with the first half of 2019, a record high. Source: CCA

3. On April 8, Geely Automobile Group officially became the tenth automobile group member of the authoritative automobile standard-setting organization IATF (International Automobile Working Group), and is a member with voting rights of directors. This is the first time that IATF has absorbed Asian car companies as members. Provides new impetus for the transformation, upgrading and healthy development of the global automotive industry. Source: China Economic Network

4. Xiaomi Group announced on the Hong Kong Stock Exchange that the board of directors formally approved the smart electric vehicle business project, and plans to establish a wholly-owned subsidiary to be responsible for the smart electric vehicle business; the first phase investment is 10 billion yuan, and it is expected to be 10 billion yuan in the future. The annual investment is 10 billion U.S. dollars. Source: Chinanews

5. Lixiang and Xinchen Power Machinery Co., Ltd. signed an investment agreement, and the two parties will establish a new joint venture company-Sichuan Ideal Xinchen Technology Co., Ltd. The new company will develop and manufacture a new generation of range extender for Lixiang. Expand the domestic market share of intelligent range extender electric vehicles. Source: Gasgoo

6. A joint venture between Dongfeng and CRRC, Smart Semiconductor Co., Ltd., independently develops and produces automotive-grade IGBT chip modules. Since it was officially put into mass production on July 7, the daily output has stabilized at about 150, which greatly eases the degree of dependence on foreign countries. Quelle: Gasgoo

7. Volvo Trucks and Jiangling Motors Co., Ltd. (JMC) formally signed an agreement through an online ceremony. Through the acquisition of JMC Heavy Duty Truck, which is 100% controlled by Jiangling Motors, Volvo Trucks will establish a wholly-owned Volvo Trucks production base in China to better serve China, the world's largest truck market. Volvo Trucks' goal is to produce Volvo FM, FH and FMX series heavy-duty trucks for Chinese customers in Taiyuan from the end of 2022. Source: 360car

8. On August 31, Maruti Suzuki, India's largest car manufacturer, said that due to the shortage of chips, its September car production will be reduced by 60%. Maruti disclosed in the documents submitted to the regulator that the total output of the two factories in September will be about 60% lower than usual. The company produced 170,719 vehicles in July and 165,576 vehicles in June. Source: Gasgoo

9. Nissan Motor will stop developing new sedan models in Japan. Most of Nissan's new car sales in the past were sedans, but demand has declined in recent years. Nissan plans to focus its operating resources on SUVs and pure electric vehicles (EVs), among others, and may exit the sedan business in Japan. Source: Caijing.com.cn

10. On April 23, Honda's new CEO, Toshihiro Mibe, announced that Honda's sales share of pure electric vehicles and fuel cell vehicles in all major markets will be 40% by 2030, 80% by 2035, and 100% by 2040. Source: China News Network

TEST EQUIPMENT ABILITY

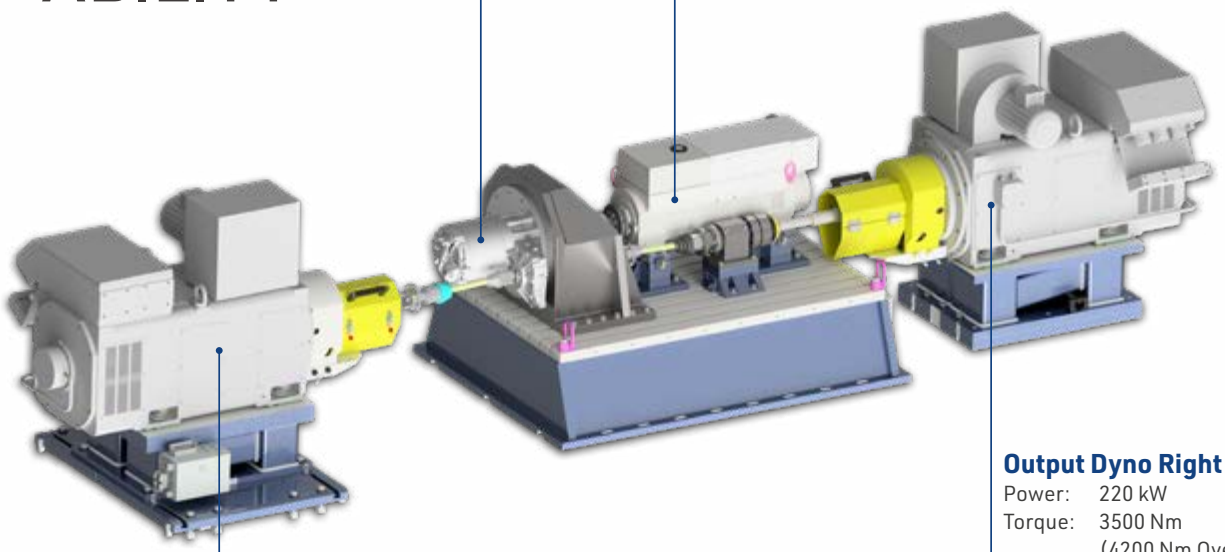

3 Electric High speed Motor Test Bench

- **High Speed Input Dyno**
  Max. Rotation Speed: up to 18000 rpm (25000 rpm planed)
  Torque: up to 450 Nm (630 Nm Overload)
  Power: up to 282 kW
- **Output Dynos**
  Max. Rotation Speed: 3000 rpm
  Torque: 3500 Nm
  Power: 220 kW
- **VES**
  Max. Power: 250 kW (500 kW in parallel mode)
  Max. Voltage: 1000 V
  Max. Current: 1000 A (2000 A in parallel mode)

ADDITIONAL DEVICES

- Current measurement equipment
- Climate Chamber
- Conditioning for coolant water
- Reducer transmissions

GTSystem

GTSystem GmbH
Galileo-Allee 2
52457 Aldenhoven

+49 (0) 2464 90267 - 00
+49 (0) 2464 90267 - 19
info@gtsystem.de

www.gtsystem.de

GTSystem GmbH
gtsystem-gmbh